74616.xx
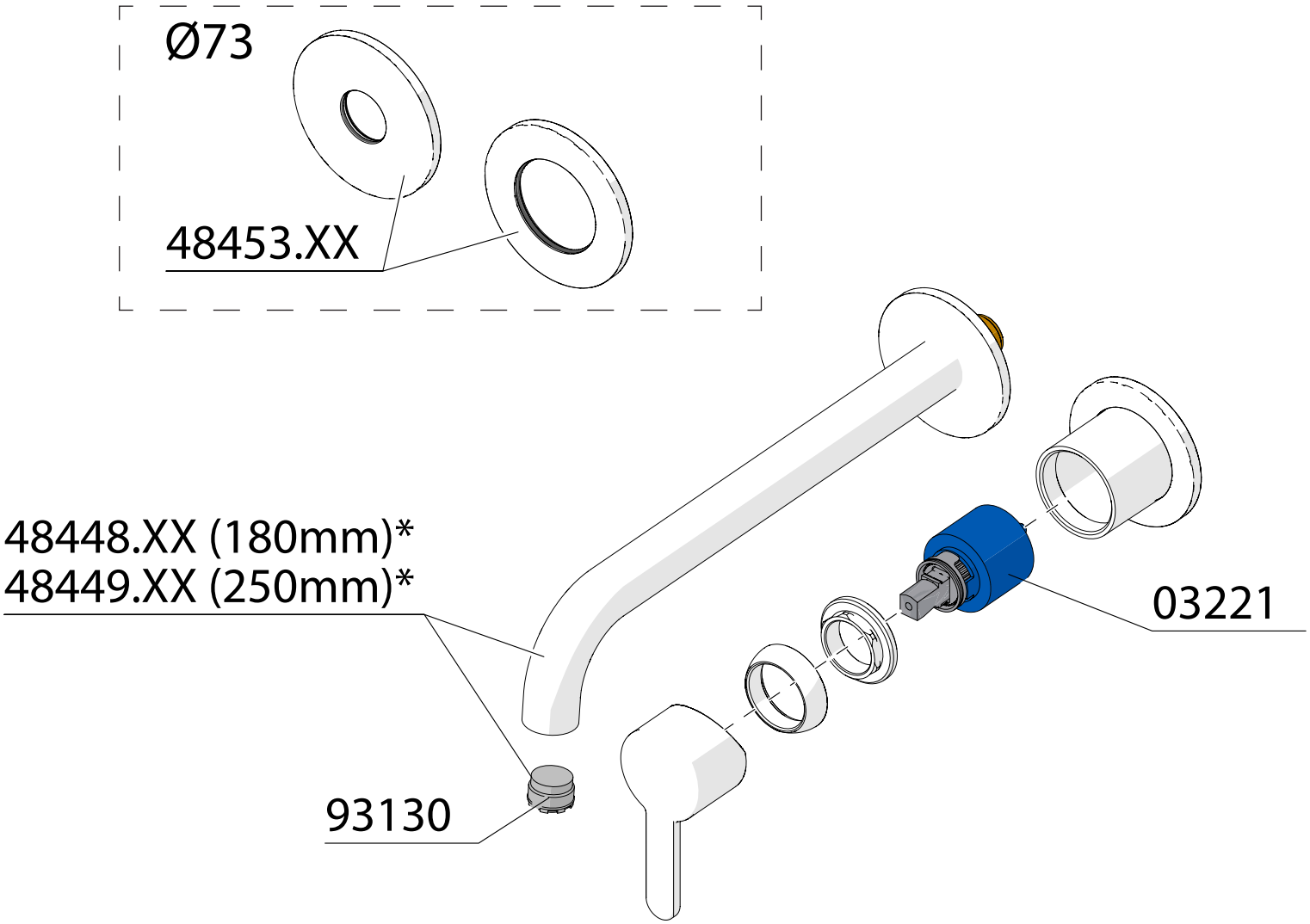
*xxxxx.00 Chrome
*xxxxx.46 Steel (PVD)
*xxxxx.61 Matt Black
xxxxx.77 Polished Brass
xxxxx.79 Brushed Brass
xxxxx.87 Brushed Copper